Installation Manual

Montaj Kılavuzu
Installationsanleitung
Manuel d'installation
Manuale di installazione
Manual de instalación
Инструкция по установке
دليل التثبيت

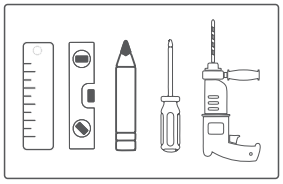

bien

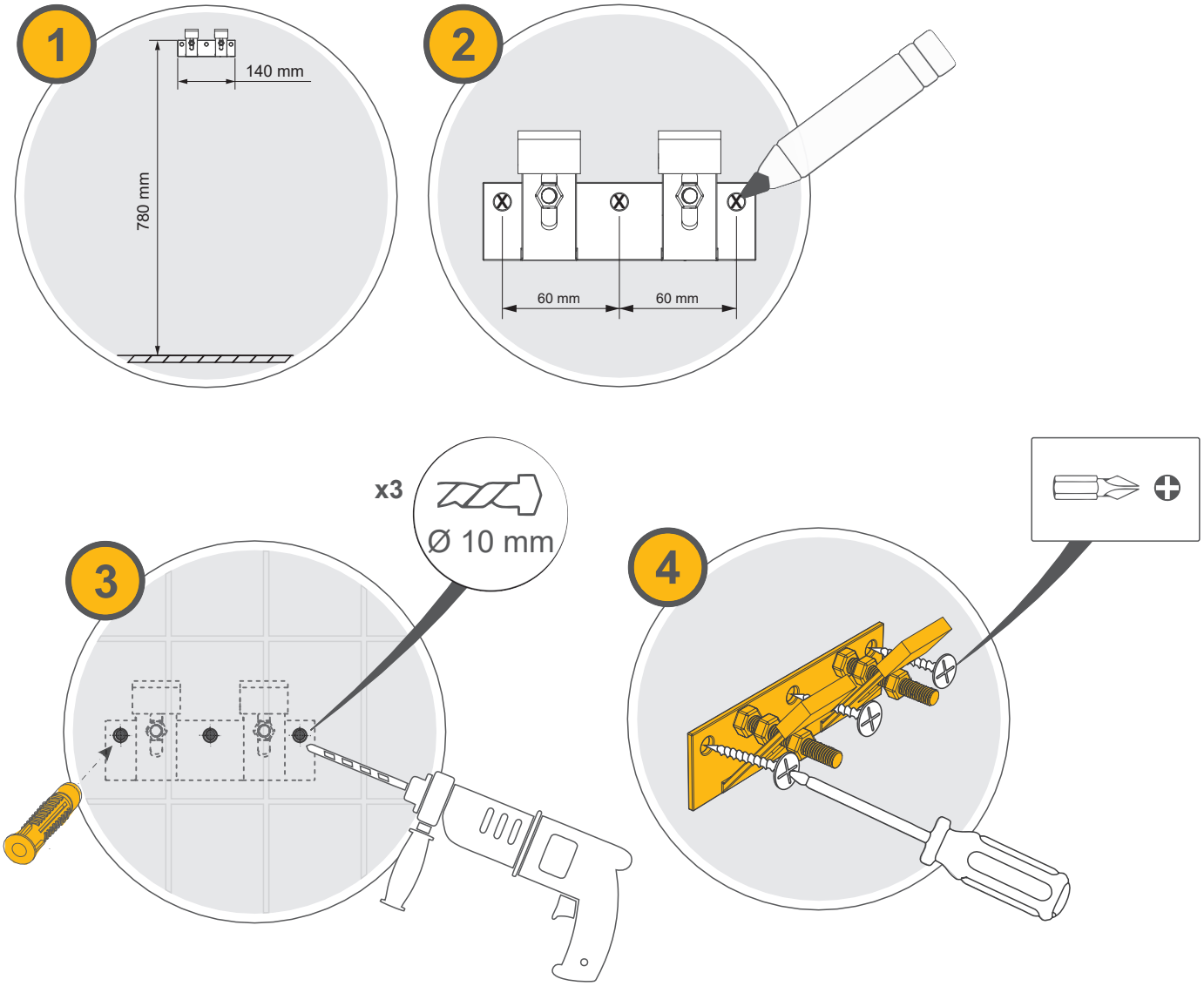

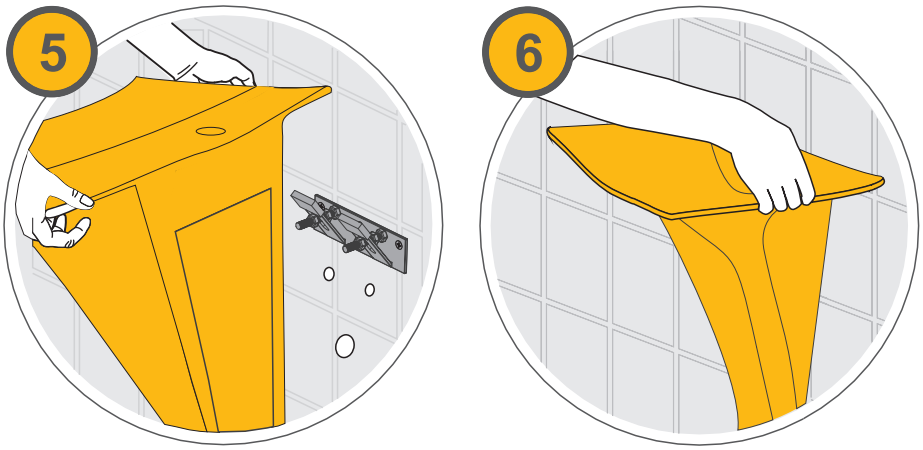

1580502000516 Rev:0

bien

www.bienworld.com.tr

BİEN BANYO ÜRÜNLERİ SAN. ve TİC. A.Ş.

Headquarters
Gömeç Sk. No:39
Acıbadem, İstanbul / TURKEY
Tel: +90 216 614 1060 (pbx)
Fax: +90 216 614 1085
e-mail: info@bienbanyo.com

Bozüyük Factory
Yeni Mah. Seramik Cad. No:7/1
Bozüyük, Bilecik / TURKEY
Tel: +90 228 314 0200 (pbx)
Fax: +90 228 314 0210

Bilecik Factory
Hürriyet 2.OSB Mah. 10.Cad. No:27/0
Merkez, Bilecik / TURKEY
Tel: +90 228 314 0200 (pbx)
Fax: +90 228 314 0210